MARKING CONTENT ON REVERSE SIDE:
PART NO. 760022240-C 17.5*6.00 15° DC DATE X X X
MAX LOAD 2000KG MAX KPA700
(ACCORDING TO CUSTOMER REQUIREMENTS,
TYPEFACE:SIX TIMES NEW ROMAN,
THE DEPTH OF WORKS:0.3MM)

Dynamic Unbalance

1、A≤30G

2、B≤30G

3、A+B≤50G

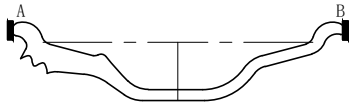

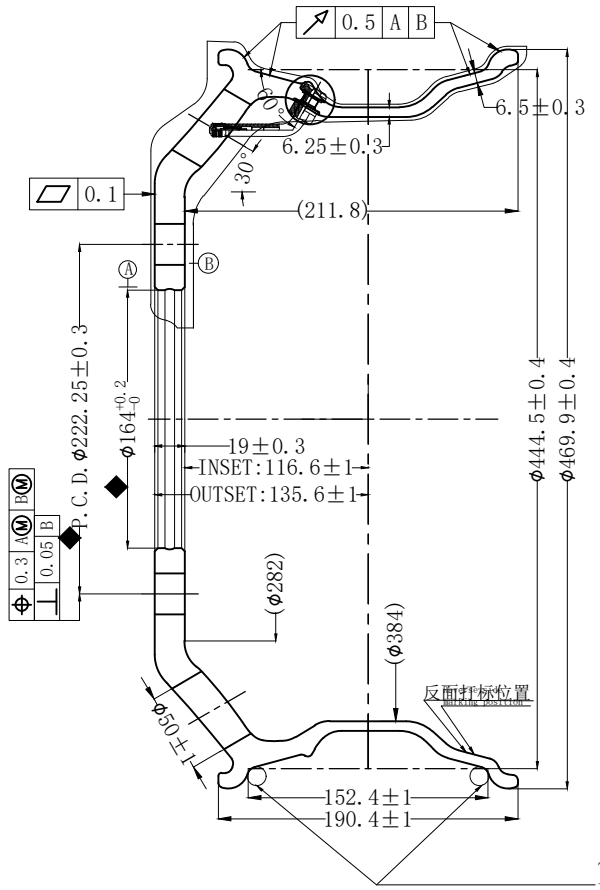

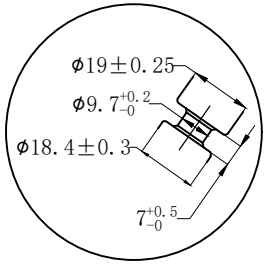

2:1

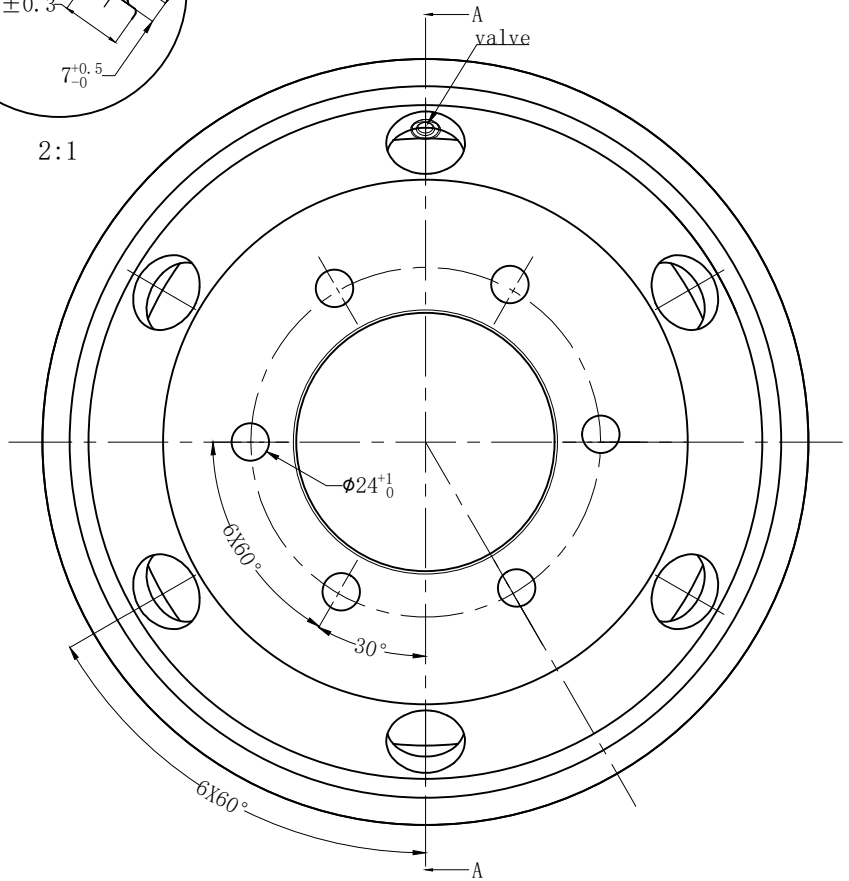

Technical note:
1. Compliance with US Federal Moter Vehicle Safety No.120
2. Durability Test(SAE J267)
★ Cornering Fatigue Test
-Loading Mode:90°
-Load: 1050±87kg.m
-Cycle:300000
★ Radial Fatigue Test
-Load:5600±346kg.m
-Cycle:100000
3. Tyre:220/70R17.5,radius:0.393m
4. Valve balance testing standards:max1100g.cm
5. Valve:TR554D.
6. Valve nut torque. LBS(8.95-14.64n.m)
7. Valve cap:2-101
8. Two pieces nuts M22-1.5,torque:62/69kg.m
9. Tolerance
Dimentional Tolerance ±1
Angle Tolerance ±1°
Redius Tolerance ±1

The ball with feet in diameter
INSPECT CIRCUMFERENCE
USING φ16MM
(0.629 INCHSI
DISE TAPE PER TIRE AND
RIM ASSOC SPECFICATION

Changed the level	Place a few	Changed notification number	Changed content	Signature	Date

Important features	◆
Key Features	★

Design		Product picture	GT062-18 17.5*6.0 INSET/OUTSET: 116.6/135.6	Drawing NO.	760022240-C
Proofreader				Edition	Weight (Theory) / Percentage
Examination		Vehicle model		A/1	13Kg / 1:1
Technology		Surface treatment	Material/polishing	A total of one	The first page
Standardisation		Material	6061—T6	QINGDAO J&G	
Ratification					
Date		Projection marks			